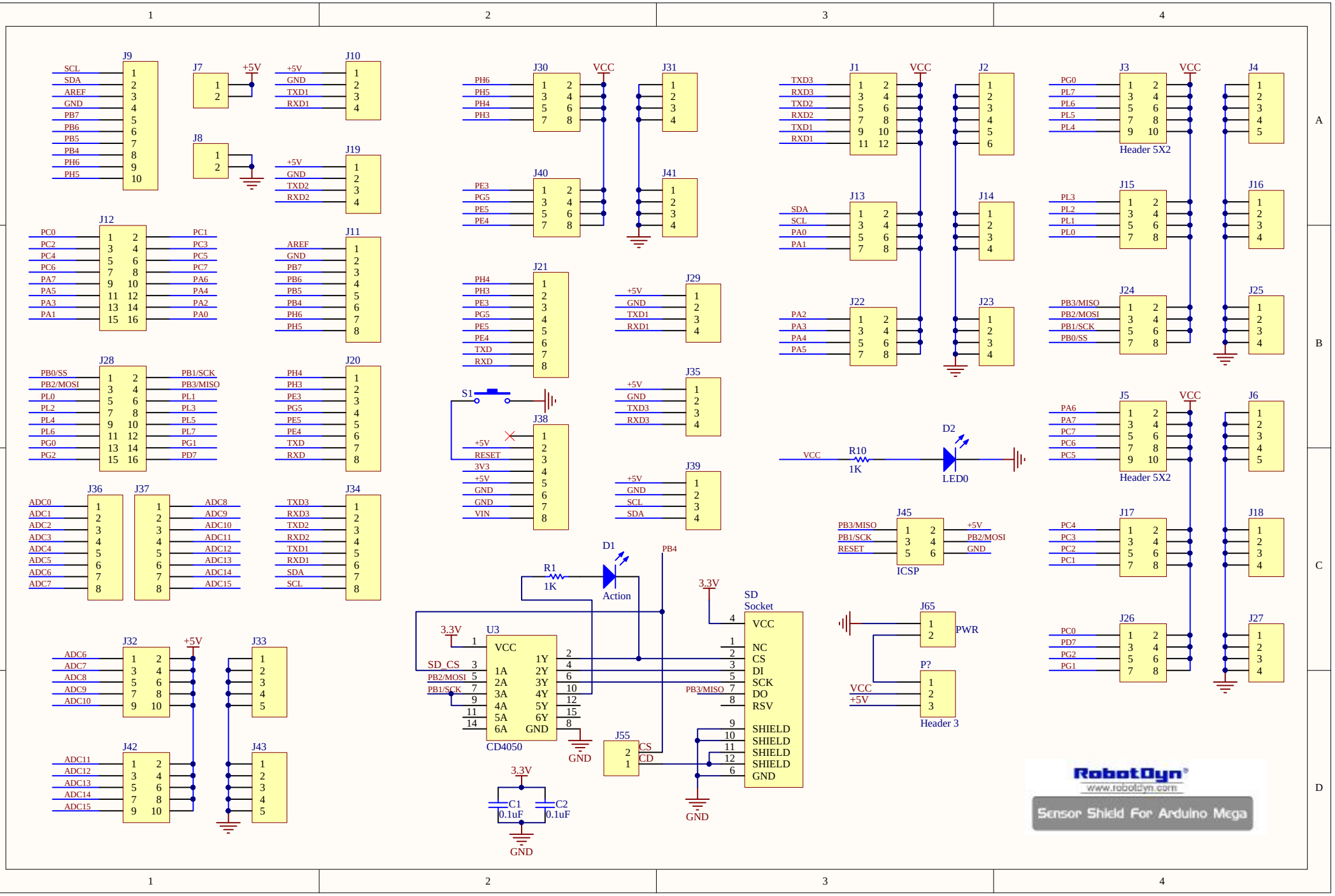
J9
SCL
SDA
AREF
GND
PB7
PB6
PB5
PB4
PH6
PH5
J7
+5V
J8
J10
+5V
GND
TXD1
RXD1
J19
+5V
GND
TXD2
RXD2
J12
PC0
PC2
PC4
PC6
PA7
PA5
PA3
PA1
PC1
PC3
PC5
PC7
PA6
PA4
PA2
PA0
J11
AREF
GND
PB7
PB6
PB5
PB4
PH6
PH5
J28
PB0/SS
PB2/MOSI
PL0
PL2
PL4
PL6
PG0
PG2
PB1/SCK
PB3/MISO
PL1
PL3
PL5
PL7
PG1
PD7
J20
PH4
PH3
PE3
PG5
PE5
PE4
TXD
RXD
J36
ADC0
ADC1
ADC2
ADC3
ADC4
ADC5
ADC6
ADC7
J37
ADC8
ADC9
ADC10
ADC11
ADC12
ADC13
ADC14
ADC15
J34
TXD3
RXD3
TXD2
RXD2
TXD1
RXD1
SDA
SCL
J32
ADC6
ADC7
ADC8
ADC9
ADC10
+5V
J33
J42
ADC11
ADC12
ADC13
ADC14
ADC15
J43
J30
PH6
PH5
PH4
PH3
VCC
J31
J40
PE3
PG5
PE5
PE4
J41
J21
PH4
PH3
PE3
PG5
PE5
PE4
TXD
RXD
J29
+5V
GND
TXD1
RXD1
S1
J38
+5V
RESET
3V3
+5V
GND
GND
VIN
J35
+5V
GND
TXD3
RXD3
J39
+5V
GND
SCL
SDA
D1
Action
R1
1K
PB4
3.3V
U3
VCC
1A
2A
3A
4A
5A
6A
1Y
2Y
3Y
4Y
5Y
6Y
GND
CD4050
SD_CS
PB2/MOSI
PB1/SCK
GND
J55
CS
CD
C1
0.1uF
C2
0.1uF
SD
Socket
VCC
NC
CS
DI
SCK
DO
RSV
SHIELD
SHIELD
SHIELD
SHIELD
GND
PB3/MISO
J1
TXD3
RXD3
TXD2
RXD2
TXD1
RXD1
J2
J13
SDA
SCL
PA0
PA1
J14
J22
PA2
PA3
PA4
PA5
J23
J3
PG0
PL7
PL6
PL5
PL4
Header 5X2
J4
J15
PL3
PL2
PL1
PL0
J16
J24
PB3/MISO
PB2/MOSI
PB1/SCK
PB0/SS
J25
J5
PA6
PA7
PC7
PC6
PC5
Header 5X2
J6
J17
PC4
PC3
PC2
PC1
J18
J26
PC0
PD7
PG2
PG1
J27
R10
1K
D2
LED0
J45
PB3/MISO
PB1/SCK
RESET
+5V
PB2/MOSI
GND
ICSP
J65
PWR
P?
VCC
+5V
Header 3
RobotDyn
www.robotdyn.com
Sensor Shield For Arduino Mega